NINGBO XINGTAI TECHNOLOGY CO.,LTD.

Add：No.6,Xinrui Road Wuxiang Township Industry Park,
Yinzhou Disteict, Ningbo City, Zhejiang Provinge
E-mail：sales@xtservo.com
Domestic 24-hour service hotline：4008-123468
Landline：0574-87668082 0574-87353105
fax：0574-87352448
URL：www.xtservo.com

Xingtai Technology

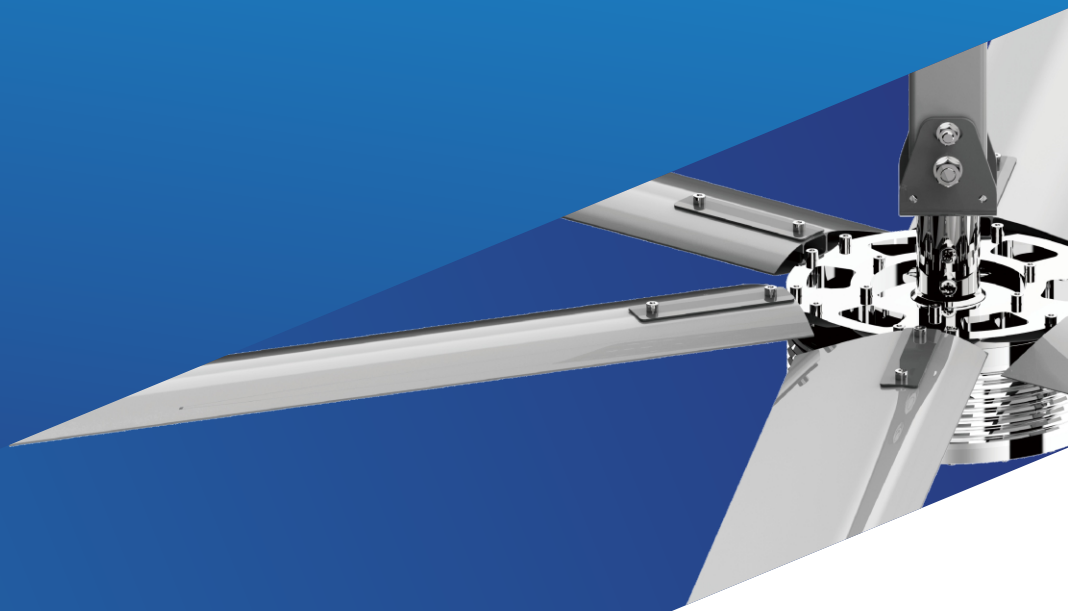

Ultra-low power / extreme energy

HVLS-FD1A series
HVLS FAN

PREFACE

+ YKZK S K[JY J K X y

7KDQN\ RX IRUSXUFKDVLQJ ; LQJ WDL+ 9/6)' $ VHULHV + 9/6)$1 ; LQJ WDL + 9/6)' $ VHULHV + LJ K YROXP H ORZ VSHHG LQGXVWLDOI DQ FDOHG + 9/6)$1 Z KLFK GHYHORSHG Z LWK [LQJ WDL SHUP DQWP DJ QHWGLUHFWGULYH P RWRU DQG VHUYR IRQWURO HU

7KH GYDQWDJ HV UH LK K SHU RUP DQFH ROZ RLVH J DOHWDU P DLQWHQDQFH IUHH DIWHW HQHUJ \ DYLQJ DQG RV RQ -9/6 $1 DH ZGHO XVHG QL ZRUNVKRS ROJ LVWLFV WRUDJ H J \ P JP QDVLXP QGRRU OS\ J URXQG J \ P EU 6 KRS PXVHXP WDWLRQ HP LQDO QOG WKHU OSFHV

7KLV P DQXDO LV RQO DSSOFDE OH WR ; LQJ WDL + 9/6)' $ VHULHV + 9/6)$1 7KH P DQXDOSURYLGHV WKH UHOHYDQWSUHFDXWLRQV DQG J XLGDQFH RQ WSH VHOHFWLRQ LQVWDOODWLRQ SDUDP HWHU VHWWLQJ GHEXJ J LQJ DQG IDXOW GLDJ QRVLV 8 VHUV VKRXOG UHDG WKH P DQXDO FDUHI XOO EHIRUH XVLQJ WKH SURGXFWRU KWH eWWLPWH

$ OOUHJ LRQDODJ HQWV RI WKH FRP SDQ\ VKRXOG VHQG WKLV P DQXDOWR WKH HQG XVHU DQG NHHS LW SURSHUO IRU ODWHU XVH : KHQ XVLQJ WKLV SURGXFWSOHDVH IROORZ WKH P DQXDORU XQGHU WKH J XLGDQFH RI SURIHVVLRQDO LQWDOODWLRQ HUVRQ 7KH HOHQGV QL KWLV PDQXDO UH RU LOOXVWDWLRQ RQO DQG P D\ GLIIHU IURP WKH SURGXFW\ RX RUGHU7KH FRQWHQW VRI WKLV P DQXDOZ LOOEH FKDQJ HG GXH WR SURGXFWXSJ UDGHV RUVSHFLê FDWLRQ FKDQJ HV ,Q FDVH WR RUGHUP DQXDOV GXH WR GDP DJ H RUORVV FRQWDFWUHJ LRQDO DJ HQWV IR HFK IRP SDQ\ RU LOHFWO RU IDWU VDOHV HUYLFH

qæ /TYZX[IZOUTY UX XUJ[IZ TOYZGRRGZOUT GJ [YK

c qæ 6XKIG[ZOUTY HKLUXK YXUJ[IZ TOYZGRRGZOUT

rão• (KLKOXTYZGRRKGVZKOZUKTVYXZGPSPGKZXOOGGTRYUR Y KTMYONTUK[IRKGSORO GX]OZZNKYYKSSHGRVU_> OTMZ4SUJKLRGSO]ROZZNKZX[IKZU_XNKKW[OVSIKNTKZIQ ZNKNGYGKTJGYYKSXKRK_JVGXYGTJOSKTYOUTY ZNKRDOYXSVGXYGTJKINTOIGR OTYZX[IZGOYUZTGYXOKTYZGRRGZOUT!

rão• >OTMZGO.<29 ,'4 NGYYZXOZX K[OXKSKTZY HKLUX ZNKOTYZGRRGZOUTUXV GXKGZYY[XLGIK OZLNKXOYGSGMK ZUKHKXGXGKXUXKXVRGIKJ!

råo•: NKOYTZGRRUGLZOTUMNZVGROYGS[YZSKKZNKKW[KOSXKTZUYZNXKXG]OTMY!

ræo• >OTMNZRKLYGGFZRNKGKYZKYXGKTUZSRRUZUKNJG\RUUVNKKTUSKTUT!

rç 'LZKXZNKOTYZGRRGZOUTUL>OTMZGO.<29,'4 INKIQ]NKZNKXKGIN GIKYYUX_OYIUXKIZR_OTYZGRRKJ GIUXJOTMZUZNKZKINTOGRXKW[OXKSKTZYZU KTY[XKYGLKIUTJQZOUTYHKLUXKKH[MVOTMGTJUVKXGZOUT

(2) Product specifications, models and technical parameters

>OTMZGO.<29 ,'4 YVKIOLOGZOUTY

Model	Fandiameter (Pç	Standard connecting rod (Pç	Motorpower (NZç	Number of fan blades (SFVç	Air volume (P PIQç	Maximum speed (USPç	Fan weight (NJç
+9/6)' $							
+9/6)' $							
+9/6)' $							
+9/6)' $							
+9/6)' $							
+9/6)' $							
+9/6)' $							
+9/6)' $							
+9/6)' $							

qç /TYZGRRGZOUT VXUIKYY RU]

(1) Basic requirements for installation of Xingtai HVLS FAN

'YRUTGMZNKRGZNTKOMDNGZHUnåKnSKKXZNKRGYTZZX[IKZI[QXTHKOTYZGRRKJ K↑KVZUYKKKYRZX[IKZI[UXTIKXKYZX[IKZ[YXVNKSXKOYGNRKGKSZX[YZYX[IKZU_XNZNK IUSVRKZX[IKZYX

qæ (GYQXIKW[OXKSLKUTZZNYKOTYZGRRGZOUT

1) The safe and effective installation space distance of the fan is more than 0.8 meters;

2) Select a safe bearing girder for installation,otherwiseour companycan transform according to the site after installation;

3) Special installation site can be installed according to the site.

qç ([ORJOYTZNK[IZ[XXKKW[OXKSKTZY

. YNGVYKKOKARYNGVYKKJKRKKIRUTIKXKKGZXNHKGSX[YHKGRURR[SZT_VGKTJUZNKX NU[YOYTZNX[IKZYXNKUZGHRQORJNOKQMNKNWZ[KOSXKTQZNKGKZXZNGåTrç SZNnKinimum fan blade safetydistance from obstaclesis 0.2m;

c 2 d 9GLKZ_ SKGY[XKY UUX NZK TOYZGRPGZOUT UU >ST MZGO <29 ,'4

qæ d **Engineer with aerial work qualification (as shown in Figure 1)**

Check the safety guarantee facilities

(Safety helmet, safety belt,reflective clothing,labor protection shoes,warning belt, warning signs)

2o• **Fasteners (as shown)**

' R R G K Z K Y G K N O M Z N K T M Z O N T J [Y Z H K U O R G Z R Y G I Z [G Z K X Y O S U K Z N G ã T ã Z O S K Y !

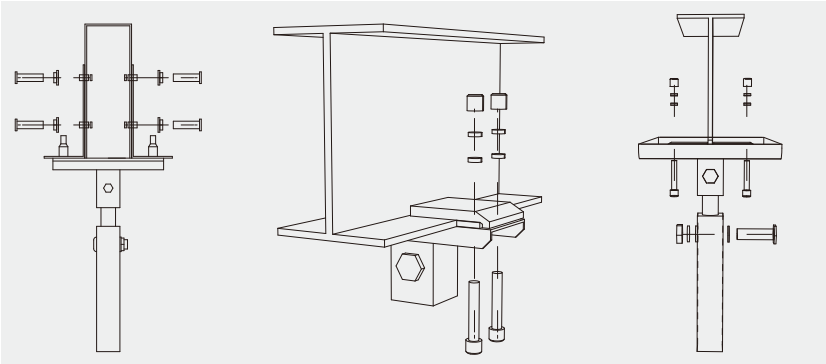

cqæ d 9Z K K [R X Z K X G I Z O U T

The tensile stressstrength of each wire can reach 000KG, and eachconnection point is set with double protection;

cqç d d / T J [Y Z X S O G G O R T G T S G O H T U J V X U Z K I Z P O U T M Z X Z [X K

Fan safety ring,when there is an accident, the safety ring can play a protective role, to prevent any slide of parts;

cqè d / T J [Y Z X R O G G X R M G K T I G T H R G J Z K V K Y G L K Y Z Z X [I Z [X K

Connect all the fan blades and the chassis at the point to become the overall structure; the servo drive control system will automatically alarm to stop the operation when any abnormality is detected.

c 3 d Installation requirements and scope of Xingtai HVLS FAN

1o• Installation distance requirements

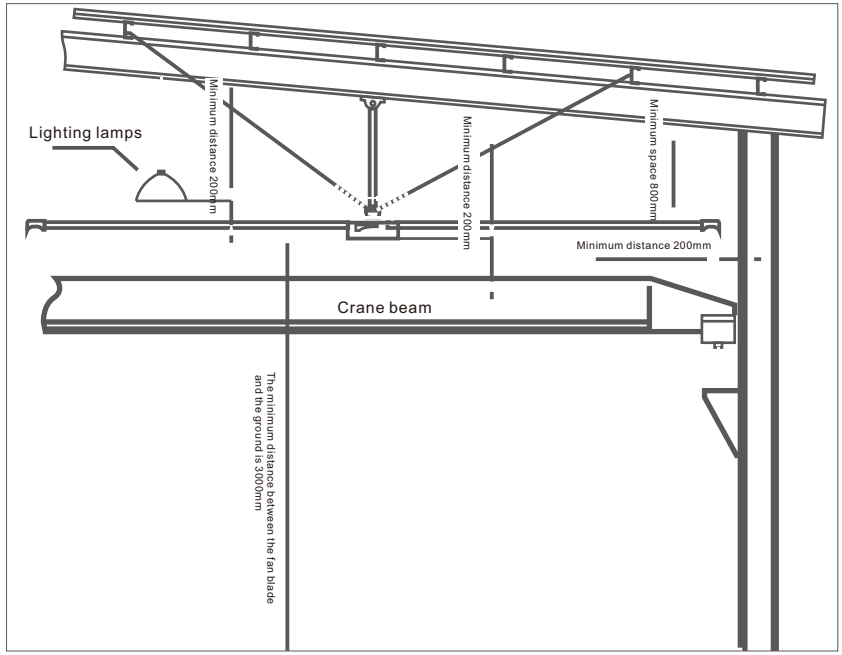

qço• Input power requirements

380Vor220V。

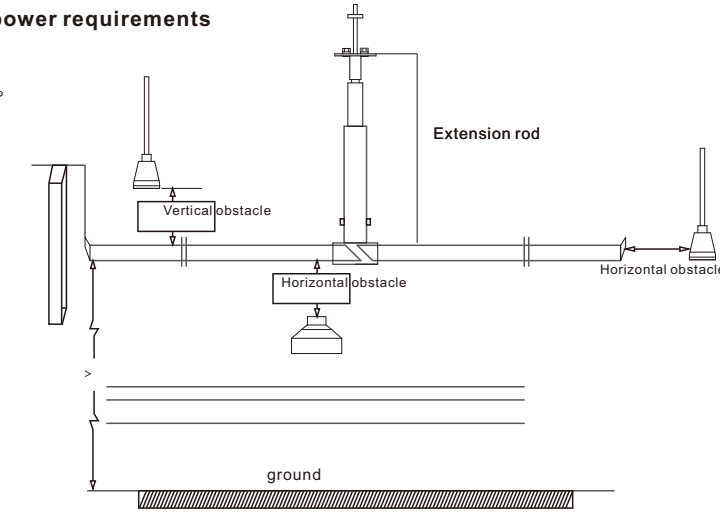

Elevation installation diagram of large fan

3o• Installation method and scope of the steel structure

Steel structure workshop is widely used in workshops, warehouse tubes and other tall spaces,anditisthemostcommonbuildingstructure in the installation process of our company. For this kind of structure, our company has designed a clip oninstallationthatdoesnotaffectthestructureofthe buildingitself(seeFigure1).Thiscliponinstallation methodatthebottomofthebeamgenerallyrequires the installation beam width to be between 100mm and300mm(seeFigure2).

If the beam width is greater than 300mm, special installation parts need to be customized.According to the different on-site environment, on the basis of this installation method, direct installation, column installation, sidedeviationinstallation,sidedeviationextension and other installation methods have been developed.

4o• Direct installation process with the installation point directly below the main beam

Step 1: installation of fan body (cement beam, h, I-shaped steel structure)

/ T Y Z G R RWG [Z G R XOR ZW [O X K SIKs T Z Y Is necessary to clean the installation position of the fan body (as shown in Figure 1); The screws of the hanging plate and the hanging plate shall be tightly and firmly matched after tightening. The outermost nut must be coated with thread locking glue before tightening to prevent loosening and falling off and other potential safety hazards.

VOZ[XKqæ

/ T Y Z G R RGG [ZKOYUYTUXFOKY Flat gasket, hexagon socket head cap screw, hanging plate, hanging plate, installation beam (I-beam), spring gasket, hexagon nut.

/ T Y Z G R RSOKZONUUT First, clean the installation position with the hydraulic lift truck, put the fan body (fan connector), fasteners and tools on the hydraulic lift truck, and clean the surface of the installation position after rising to the installation position (as shown in Figure 1); Secondly, install the fan body to the proposed position (as shown in 2, 3, 4 and 5), and adopt the clip type installation method, and fasten with 3 or 4 groups of 12.9 grade M16 fasteners (as shown in 2, 3, 4 and 5); The hanging plate and the hanging plate have three groups of screw mounting holes respectively. Select the appropriate mounting holes to tighten the screws to ensure that the reis no loosening and falling off.

VOZ[XKqç

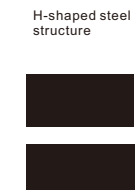

VOZ[XKqè

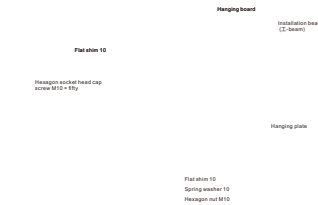

VOZ[XKqé

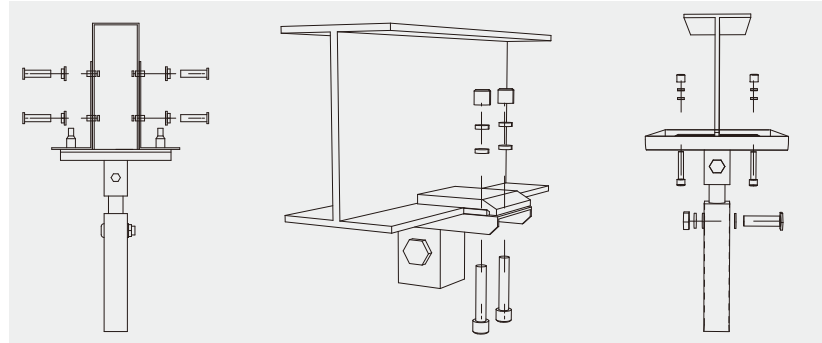

VOZ[XKqê

Step 2 u Installation of fan extension rod

/ T Y Z G R RWG[ZGORXOKZW_ [O X K SUKTZY u Adjust the fan connecting body after installation to the vertical state (use a vertical hammer or indoor vertical reference, as shown in Figure 1). Tighten the two sets of M16 bolts at the upper and lower ends of the fan extension rod to keep the fan vertical. (as shown in the figure below).

. UXO UTZGR TGJ \KXZOI GR TOYZGRRGZOUT

M16 bolt assembly

M16 bolt assembly

/ T Y Z G R RGGIZKOYUYTU XYO KY Two sets of fan extension rod and M16bolt(M16screw and nut).

/ T Y Z G R RSGKZONUUT u Connect the upper end of the extension rod with the hanging plate of the fan body with two sets of M16 bolts and adjust it to the horizontal and vertical state, then tighten the loosening nut to keep the fan vertical.

Step 3 u Assembly of fan permanent magnet synchronous direct drive moto and fan bone (fan blade fixing frame)

/ T Y Z G R RWG[ZGORXOKZW_ [O X K SUKTZY u The fan components shall be free of bruises, the screws shall be free of looseness, and the fan bones (fan blade fixing frame) shall be firmly connected; Rotate the fan gently with your hand, and the fan rotates smoothly; The fan remains vertically balanced.

/ T Y Z G R RGGIZKOYUYTU XYO KY u Permanent magnet synchronous direct drive motor for fan, lower connector of motor fan extension rod, fan bone (fan blade fixing frame), M16 bolt assembly.

/ T Y Z G R RSGKZONUUT u Install the connector of motor fan extension rod and fan bone (fan blade fixing frame) to the proposed position of permanent magnet synchronous direct drive motor for fan with M16 bolt assembly, and assemble it to the lower end of fan extension rod to fix it (as shown in 1,2,3,4).

VOZ[XKqæ

VOZ[XKqç

VOZ[XKqè

VOZ[XKqé

Step 4 u Assembly of fan blades and safety ring accessories

/ T Y Z G R RWG [Z G R XOKZW [O X K Su K T Z Y

/ T Y Z G R RGG I ZKOYUYTUUXFan blade, fan blade inner reinforcement, fan blade outer fastener, fanbone(fanbladefixingframe),safetyringassembly(safetystrap),connectingboltassembly.

/ T Y Z G R RSCKZ ZONUUTInsertthefanbladereinforcementintothefanbone(fanbladefixingframe) first,andtheninsertthefanbladeintothefanbladereinforcement.Exceptforthesecondholeonthefanblade, fix the fan blade with screws first, and then fix the fan blade fastener and safety ring assembly (safety strap) together with the fan bone (fan blade fixing frame) and the fan blade according to the method (as shown in Figures1,2and3),Finally,tightenallthescrewsonthefanbladetokeepthefaninverticalbalance(asshownin 4).

VOZ[XKqæ

VOZ[XKqç

VOZ[XKqè

VOZ[XKqé

Step 5 u Installation of fan steel wire traction cable balance protection

/ T Y Z G R RWG[ZGORXOKZW[O X K S K T Z Y u The stress strength of each steel wire cable is required to reach 1000kg, and double balance protection is set at each connectionpoint;(as shown in Figure 2 and 3 as built drawings).

VOZ[XKqæ

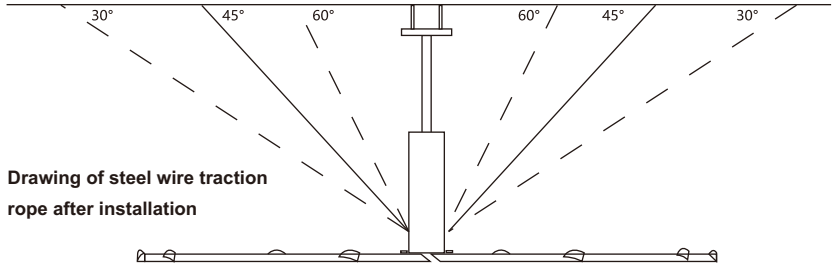

Drawing of steel wire traction rope after installation

VOZ[XKqç

After installation, the fan will be in force balance, but the Angle of the wire cable and the horizontal surface will affect the force size of the fixed point, and usually the wire cable changes due to the distance of the fixed point in the site environment. General wire traction cable and horizontal plane angle shall be at (within 30°-60°) and as close to 45° conditions as possible (Figure1).

VOZ[XKqè

/ T Y Z G R RGG[ZKOYUYTUuX O K Y

Plasticcoated steelwirerope,steelwire ropecollet,trianglering,eyebolt(model)

/ T Y Z G R RSGKZZONUUT u each steel cable bears the same force (asConnect one end of the steel cable to the designated screw connected with the lifting ring of the fan housing, and tie the other end to the lifting ring screw on the roof beam. After tying four steel cables, adjust the length of the basket screw to ensure that shown in figures 4,5 and 6).

VOZ[XKqé

VOZ[XKqê

VOZ[XKqë

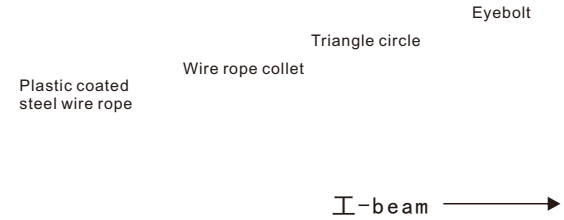

Step 6 u Installation of fan power cable

/ T Y Z G R RWG [ZGORUOTKZ W [O X K S u K T Z Y u the cable should be fixed firmly, to prevent the fan operation,causingsafetyrisks;the fandrivecontrollerfromthepositionofthefan.rice.

/ T Y Z G R RGGI ZKOYUYTUUX O K Y u cable line,fireprotectionpipe,pipecard

/ T Y Z G R RSGKZZONUUT u connectthepowercable(cable)totheelectricalcontrolboxalongtheroof beamandothercomponents(seeFigure1and2).

VOZ[XKqæ

Cable

VOZ[XKqç

Cable line

Pipe clamp

Fan servo drive controller

Step 7 u Install the fan servo drive power connection

/ T Y Z G R RWG [ZGORUOTKZ W [O X K S u K T Z Y u the cable should be connected according to the specified terminal column, and the terminal column screws should be tightened to prevent the potential safety risks caused by loose shedding or poor contact; the fan servo driver should be installed for convenient operation and management.

/ T Y Z G R RGGI ZKOYUYTUUX O K Y u fanservodrivecontroller,firelinepipe,pipecard

/ T Y Z G R RSGKZZONUUT u connect the power connection lines (cable lines) connected to the fan servo driver according to the regulations (as shown in Figures 1, 2 and 3 below), L1, L2 and L3 to the power supply,u,Vandwtothefanmotor,andmotorandtemptothetemperaturecontrolline.

VOZ[XKqæ

VOZ[XKqç

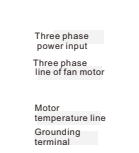

VOZ[XKqè

, [T I Z O JUKTY I X O VUZSOGUOTTO X I [ZOKZX S OuT G R

:K X S OSTGGXRQ O :KVX S OTTGGSRK		, [T I Z O JUKTY I X O V Z O U T
/ r / r /	7 KHUIS K D S VRI Z H I Q SVX HVU P L Q D O	7 KHUIS K D S VRI Z H I Q SVX HVU P L Q D O
8 r 9 r :	0 R WWRKH SKLDQVSHX HVU P L Q D O	0 R WWRKH SKLDQVSHX HVU P L Q D O
7 r 7	0 R WWRH P S H HLDQVSHX HVU P L Q D O	0 R WWRH P S H HLDQVSHX HVU P L Q D O
	* U R X Q G W H Q J U P L Q D O	* U R X Q G W H Q J U P L Q D O

Step 8 u Operation and commissioning of HVLS FAN

/TYZGRRGZOUTW[GROZ_XKW[OXKSK

TZÙYConformtofactorysettings

. U] ZU [YK ZNK LGT YKX\U

JXO\XU The drive comes with an LCD operation panel, connected to the 4-core port of the drive through a 4-core flat cable. Through the operation panel, users can modify the drive for functional parameters, working status monitoring, and the control (start, stop) of the operation panel during the operation. The appearance display is shown in Fig (Figure 1, 2 and 3):

VOZ[XKqæ

VOZ[XKqç

VOZ[XKqè

Operation panel key description

1K_	TGSK	L[TIZOUT
ESC MENU	6XUMXGS SOTM K_Q	Entry and exit of the first level menu
DATA ENTER	)UTLOXS KQ	Enter the menu screen step by step and confirm the setting parameters
△	/TIXKS KTZGR K_Q	Increment of data or function code (for speed increment at the main interface)
▽	*KIXKS KTZ K_Q	Decline of data or function code (for decreasing speed in the main interface)
◁	9NOZ KRZ KQ	In the new dynamic and running state of shutdown, the left shift key canMove the display parameter corresponding to the cursor. When modifying the parameter, clickThe shift key can select the modification bit of the parameter
▷	9NOZ OXNZ KQ	In the shutdown state and operation state, the right shift key can be used to moveThe display parameter corresponding to the moving cursor can be modified by movingThe bit key can select the modification bit of the parameter, and press the right shift key in the main interfaceKey cycle displays 3 main interface parameters
RUN	8[T Q_	In the operation mode of the operation panel, press this key to start the operation
STOP CLR	9ZUV KXKZ	In the operation mode of the operation panel, press this key to stop the operation;In case of fault alarm state, press this key to reset the fault
F/R		Reserved function

5 VKXGZOUT VGTKROTYZX[I ZOUTY

,QVKHVKXVGRZ QRUUXQQLQJ VWDVM SUHVV0 (18 (6&NH\ VRHQVMUVKHIXQFVLRQFRGHHGLVLQJ VWDVXV7KHHGLVLQJ VWDVXVLVGLVSOD\ HGE\ VKHVZR OHYHOP HQXP RGH 7KHRUGHULVVKHIXQFVLRQFRGH QXP EHUDQGRQHIXQFVLRQFRGHSDUDP HVMU3UHVV(17(5 ' 7NH\ VRHQVMUVKHIXQFVLRQSDUDP HVMU GLVSOD\ VWDVXV ,Q VKHIXQFVLRQDOSDUDP HVMUGLVSOD\ VWDVM SUHVV(17(5 ' 7 VR VWRUH VKH SDUDP HVMUVDQGSUHVV0 (18 (6&VRUHYHUVHH[LW

※ TUZKY. ,I\ RXGRQRWDYH H[LVGLUHFVO DQGVKHSDUDP HVMUP RGLêFDVLRQLVLQYDOG

: NKUVKXGZOUTS KZNUJULUVKXGZOTMZNKVGTKR

9DULRXVRSHUDVLRQVRIVKHGULYHFDQEHSHUIRUP HGVKURXJ KVKHRSHUDVLRQSDQHOIRUH[DP SOH EHORZ

$GMXVVKHP D[LP XP VSHHGRI$' P RGH 9LQSXVRSHUDVLRQ

JLYHDQH[DP SOH &KDQJ HVKHVHVP D[LP XP VSHHGRI UP LQVR 5 P LQ

Ø ,QDQ\ VWDVMDIVMUVKHGULYHLVSRZ HUHGRQ SUHVVHVF P HQXVRHQVMUVKHHGLVLQJ VWDVM DQG HQVMUVKHSDVZ RUG 3UHV▲ NH\ DQG▼ NH\ 6Z LVFKVRVKHVHVP D[LP XP VSHHGGLVSOD\ VWDVM XQLW , 3UHVV' 7 NH\ (QVMUVKHVSHHGP RGLêFDVLRQVWDVM

Ø 3UHV▲▼ NH\ 0 RGLI\ VKHVHVSHHG, (3UHVVVKHNH\ VRP RYHDQGP RGLI\ VKHQXP EHURI GLJLW) , 6HW VR

Ø 3UHVV '7 (17(5 NH\ 6fyD YEH OP,XRKGXLF FHVVIXOO,) P3RUGHLVêVHG (6& 0(18 NH\ ([LWWKHHGLWLQJVWDWH

(5)Installation process at the side (side welding)

Side welding is a fixing method in which the fan fixing bracket is welded on the structural beam and the host structure is installed on the bracket. This installation method is usually due to the fact that the clear distance from the beam bottom to the obstacle(driving,light) in the installation structure is lessthan1.2m, so It cannot be directly installed at the bottom of the main beam,while the beam height plus the clear distance from the beam bottom to the obstacle is greater than 1.2m.

VOIZ[XKqæ

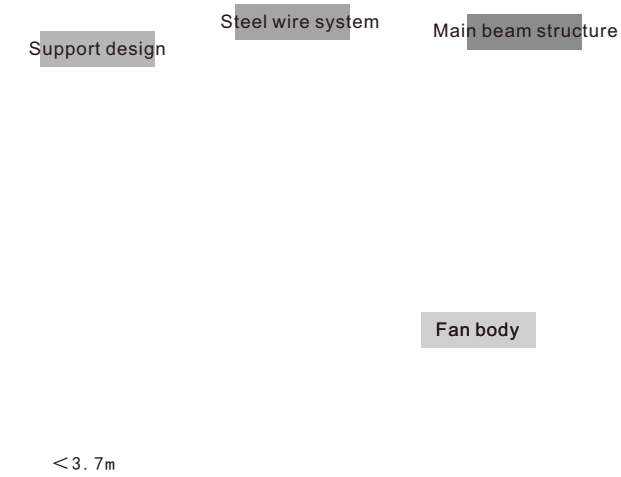

(6) Installation process at the side (side extension)

The applicable conditions of side extension installation method are similar to those of side welding, which is adopted due to the insufficient installation barrier-free net distance. The installation method of side extension avoids the welding on the mainbeam,

(7) Installation process flow with the installation point below (brick concrete structure installation)

qæo• / T Y Z G R S R U Z K G T J M U V K U L H X O G Q T J U T I X K Y Z K X [I Z [X K

The installation method of the brick and concrete structure is: one L-shaped bend (the expansion bolt is fixed) is fixed on each side of the concrete beam, the roof and the L-shaped bend are fixed on the bottom of the beam, and the bottom of the roof is connected to the extension rod or the direct connection fan. This structure requires a beam width of between 300mm and 600mm, and special customized installation parts if the beam width (thickness) degree is greater than 600mm.

VOZ[XKqæ

qço•: N K H X O G Q T J U T I X K Y Z K X [I Z [O X Y [redacted]
O T Y Z G R R X K J G Z K N K U Z Z U S Z N K K G S
O T Y Z G R R

Drill 4 groups of holes at the installation position, install the bending connector, and install the M16 expansion bolt. Fasten the fan top plate and install the fan (as shown in Figures 1,2 and).

Group of steel wire traction cables are also fastened with expansion bolts to ensure the safety and stability of the fan when it is stationary and running.

VOZ[XKqç

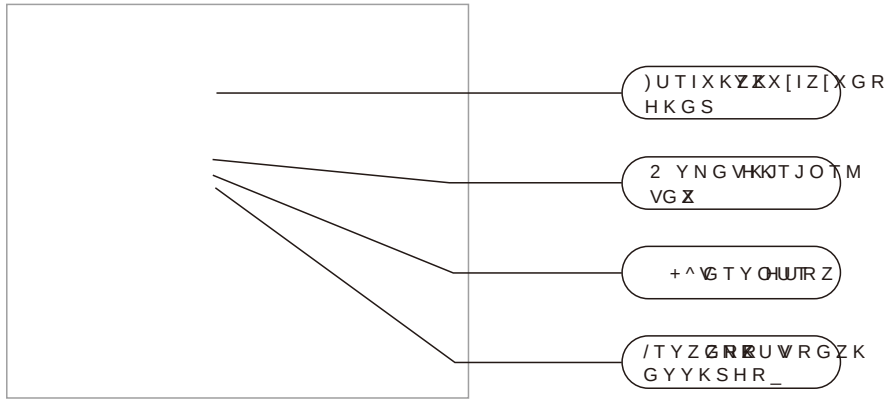

qèo•9 O J O K T Y Z G R R U G H Z X O U U Q T I X K Y Z K X [I Z [O X Y K N U] T O T O M [qæ K G T qè

If the distance between the beam bottom and the obstacles below(such as driving)is less than 1.2m, we usually use the following figure

Sidemounting method:

VOZ[XKqæ

Bea[redacted]

VOZ[XKqç

S[redacted]n Ste[redacted]m Mai[redacted]ture

[redacted]

[redacted]

VOZ[XKqè

(8) Installation process of ball column structure (see Figure 1 and 2)

Ball column structure is more often seen in modern large venues, based on the characteristics of this structure itself, the YZGTJGXJ TOYZGHRGZOUT SUJK YONU] T GY ULRU] Y

VOIZ[XKqæ

VOIZ[XKqç

(9) Installation process of the rack structure (as shown in Fig. 1,2 and 3)

1) Installation diagram of the rack structure

2) Direct installation of the rack structure

3) Layoutstructuresideloading

VOIZ[XKqæ

/TYZGHRGZOUT ZX[IZ[XK adopt splint fastening installation method, which is safe and does not damage the structure; Accurately measure and install, control the fan bladeThe height is in the middle of the beam bottom and the top of the crane to ensure safe operation.

VOIZ[XKqç

VOIZ[XKqè

qè J GOR_ SGOT ZKT GT I K

1 Operation equipment before installation and maintenance (as shown in rings 1 and 2)

VOZ[XKqæ

) N K I Q Y K I [X O L Z G _ I O R O Z O K Y

Y G L K N Z K _ R S K Y Z G L K H Z K _ R S K L R K K Z O \
I R U Z N R O T M V U X U Z K I Z Y O N U T K = Y G X T O T M
] G X T O Z T O M V] K G X T O F T M G X J

VOZ[XKqç

R G J J Z K X [I Q

H G Z Z _ K V X U] K X Y] O Z I N G R O S U U Z N
R Z O L T = M N K Z N Z K N K X G K K K ' I K V Z O U T Y
J [X O T U M V K X G Z O U T

(2) Xingtai HVLS FAN regular maintenance

rã (K L U X K Y Z G X Z O T M Z N K L G T I N K I Q] N K Z N K X Z N K V U] K X R O T K O Y O T Z G I Z] N K Z N K X Z N K M X U [T J O T M] O K O Y O T Z G I Z G T J X K R O G H R K G T J] N K Z N K X Z N K X K O Y L U X K O M T S G Z Z K X U T Z N K] O T J] N K K R Z I G T H K Z G X Z K J L U X Y K U T R _ G Z K X Z O Y O U T L O X S K J Z J H K G L K

rä * U T U Z Z N X U] G T _ Z N O T M [T J K X Z N K L G T ! * U T U Z P [S V [T J K X Z N K L G T ; Y K X Y] O Z N R U] O T J U U X U X U L K O M N Z N U [R J V G _ S U X K Z Z K T Z O U T Z I G U O J G I O J K T Z G R T P X _

rå 9 V K I O G R G Z Z K T Z O U T Y N U [R J H K V G O J Z U Z N K L G I Z Z N G Z O Z O Y T U Z G R R U] K J Z U R O L Z O T L G T Z Y G T J _ U [T M I N O R J X K T [T J K X Z N K I K O R O T M L G T X U Z G Z O T M H _ Z N K O T J [Y Z X O G R L G T : U V X K \ K T Z N [S G T H U J _ G T J U Z N K X U H P K I Z Y L X U S I U T Z G I Z O T M Z N K X U Z G Z O T M L G T G T J I G [Y O T M S K I N G T O I G R G S G M K

ræ) N K I Q N Z K K X R O G H O R O Z _ U N Z K T O J [Y Z X O G R G I [Y Y V K T Y O U T J K \ O I K H L U X K G I N [Y K

rç /Z O Y Y Z X O I Z R _ L U X H O J J K T Z U U V K T Z N K L G T U X I U T Z G I Z Z N K L G T] O Z N H G X K L K K Z U X] K Z N G T J Y

rè 2 G X M K O T J [Y Z X O G R L G T Y T K K J X K M [R G X O T Y V K I Z O U T G T J S G O T Z K T G T I K J [X O T M [Y K) N K I Q Z N K Y [Y V K T J K X Y Y I X K] Y] O X O T M H G Y K Y H R G J K Y G T J U Z N K X V G X Z Y U L Z N K O T J [Y Z X O G R L G T L U X R U U Y K T K Y Y I U X X U Y O U T I U X X U Y O U T I X G I Q Y J K L U X S G Z O U T G T J U Z N K X G H T U X S G R O Z O K Y /L Z N K X K G X K U R U Y K I Y X K] Y O Z M N Z K T X K S T O O S K T G J K V R G I K N Z K J G S G M K J V G X Z Y T O O S K

ré : N K O T J [Y Z X O G R R G X M K L G T Y N G R R H K Z K Y Z K J] N K T Z N K X K O Y T U U T K [T J K X Z N K L G T H K L U X K [Y K /L _ U [L O T J G H T U X S G R Y N G Q O T M G H T U X S G R T U O Y K Y Z X G T M K Y S K R R U X K R K I Z X O I Y V G X Q J [X O T M Z N K Z K Y Z X [T V R K G Y K Y Z U V [Y O T M O Z O S S K J O G Z K R _ L O T J U [Z Z N K I G [Y K G T J X K V G O X O Z H K L U X K [Y O T M Z O

rê 9 Z G X Z O T L G Y Z M K G X Z U X K J [I K Z N K T [S H K X U L L G T Y] O Z I N Y Z G X Z Y 9 Z G X Z Z N K R G X M K O T J [Y Z X O G R L G T] O Z N L G Y Z M K G X L O X Y Z G T J Z N K T I N G T M K Z U Y R U] G T J S K J Q I S M K G X G L Z K X O Z I U U R Y J U] T O T J U U X Y Y U G Y Z U Y G \ K V U] K X V X U Z K I Z V G X Z Y G T J V X U R U T M Z N K Y K X \ O I K R O L K U L Z N K O G X M K T O J [Y Z X O G R G I

qé)US S UT GG[RZY TGJ NGTJ RCTM SKZNUJ Y

: NK WRRU] CTM GG[RZY SG_ IK IKIU[TZKXKJ J[XCTM [YK GKGYK KXLKX UZ NZK LURRU] CTM SKZNUJ Y UX CS VRK GG[RZ TGGR_YCY

Common troubleshooting methods		
Alarmcode	Causeoffailure	resolvent
(U	&XHQRVWDWH	Check whether the configuration is reasonable, whether the encoder line is in goodcontact,andwhetherthedriveroutputisingoodcontactwiththemotor
(U	RYHUORDG	Checkwhethertheconfigurationisreasonableandwhetherthemotorisstuck
(U	/RZEXVYROWDJH	Check whether the input voltage is lower than the minimum voltage limit
(U	+LJKEXVYROWDJH	Check whether the braking resistance is normal,measure the resistance value and check the connection
(U	,QSXW9SKDVHORVV	Check whether the power input is out of phase
(U	HQFRGHULQH	Check whether both ends of encoder line are connected normally
(U	UHWDLQ	
(U	UHWDLQ	
(U	%UDNLQHEXU	Check whether the braking resistance is normal,measure the resistance value and check the connection
(U	0RWRUWHPSHUDWXUH	Check whether the motor is stuck and whether the temperature line is connected normally
(U	'ULYHUWHPSHUDWXUH	Check whether the installation of the driver meets the requirements and ensure the normal ventilation of the driver
(U	UHWDLQ	
(U	0RGXOHFRQILJ	Whether the connecting line with the motor is normal and whether the output is short circuited
(U	&RQWDFWRUHUU	retain
(U	&XHQRVWVRXWDLQ	retain
(U	2XWSXWSKDVHORVV	Whether there is phase loss from the driver output to the motor
(U	2YHUVSHHGFRQILJ	Speedexceedslimit
(U	0RWRUSDUDPHWHUWXQLQJ	Reself-study
(U	0RWRUQRWWXQHGFRUUHFWO	Reself-study
(U	UHWDLQ	retain
other	1RLVHFXUUHQW IDRSHUDWLRQ	There may be loose screws on the fan blades or sundries stuck in the motor spindle,Turn off the fan,check the blades and main shaft,and check the source of the problem
	6KDNHZRSHWYKH IDQQXQQLQJ	After turning off the fan,check whether the traction of the four wire ropes is firm,and check the extension Whether the screws on the rod are loose and whether the screws in the lifting area are tightened

qê ZZGINKJ JXG] CTMY UI WW[OVS KTZ UGXZY TGS KY

rão•GT YIKJXJXO\K IUUTRZRKKX

räo•GKXSGTKTZ SGM[TKZ KJIOZXJXO\K Y_UTTNUXY SJUXZ

rão•,GTla Jes

ræo•,GKJ HRGIJK U LGT HRGJK

rço•,OK^J HRGIJK U LGT HRGJK

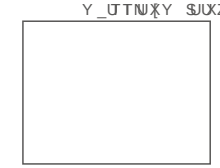
rèo•9GLKZ_ XOTM

réo•.GTMOTMK VRGZ

rêo•.GTMOTGIJXHU

rëo•:NUXGZ N[H IURRKZÃo•GT NGTJRK

rãrão•GT HUTK LGT rãrão•G JKOUXVK

rãråo•ræ IKUXa IKJX VU]KJX IUX

rãræo•(RGIUZ VEGYZOrãrÿoÕ6V^KVUXZIZO\K IUTJ[OZ

rãrèo•6UXZIZO\K VOVK rãræo•:NTKML GRGHTIK rãrêo•rê HRGIQ HURZ JGV YZGTJGX GIIKYYUXOKYJ Y6ZGTJGKGTYOZTM GYYKSHRV_UTKTZY VOVK H[IQRK ZJOK HKRYZK6< JGXZ

që) UT LOM [XGZOUT OYZ IU < 2 9 , '4 VGI QOT M ORZ

Xingtai hvls-fd1a series HVLS FAN complete configuration list (packinglist)

No.(accessory)productname		Specificationandmodel	Single machine consumption (unit:piece,piece)	remarks
rã	9 K\XUJ X O \ K X	>:rèrërâ ,râr ç '	rã	
rä	6K X S G T KS GZM T K Z Y _ T I N T KU [JYOKX Z X O SKU Z U X	* : , 3rårårâréo•rärêrçrç	rã	
rå	, G TR K G L	rä rårço3rä rêrç 3o•rå rærç S	rè Grç G	
ræ	; V V K XL KO JV R KGUZL GHT R G J K		rè Grç G	
rç	, G TH R GRJ UK] KLXKO JV O K VKR KG Z		rè Grç G	
rè	9 G L KXZO_T M	rårårâ	rè Grç G	
ré	. G T M OVTRNG Z	rærârâ	rã	
rê	. G T M OHTUGMJX	rærârâ	rä	
rë	9 [Y V K T JHK^KZT Y OXUUJT	râ rê 3 rã rç 3	rã	
rãrâ	: N XGX [HI U R RRKZOLR [M	rærârâ	rã	
rãrã	, G TN G T J R K	râ rå 3o•râ ræ 3	rè Grç G	
rãrä	, G TH U T KN [HN U U V	rårårâ rç rè o•rärêræ rç rè	rã	
rãrå	2 OZLO X M TOMT I R [JTQZT M	3rãrâ	ræ	
rãræ	5 XI N OHJU R Z	3rãrâ	ræ	
rãrç	5 XI N OHJ [I Q R K	3rãrâ	rãrè	
rãrè	= OKXXU VrK 3	rç 3 3	ræ	
rãré	V U] KIXJ JX	ræ rã rç	rärç 3	
rãrê	V U] KIXJ JX	rä râ rå	rärç 3	
rãrë	6 +N U Y K	black ' *rärç 3 3	rã 3	
rärâ	6 <) V XJ Z I Z OIUKT J [O Z	rärâ rë-1rã râ 3 3	rë	
rärã	6 <) J OKXI Z	rärâ 3 3	rê	
rärä	6 <) H K T J O T M	rärâ 3 3	rå	

No.(accessory)productname		Specificationandmodel	Single machine consumption (unit:piece,piece)	remarks
rärå	I-steelconduitfixingclip	rærå rärç rårê 3 3	ré	
räræ	Conduitfixingclip	rärâ 3 3	rãræ	
rärç	Tie	rê rärçrâ 3 3	rãræ	
rärè	Hexagonsocketscrew	3rê rårâ	rãrê	
räré	Hexagonsocketscrew	3rê rçrç	rãrä	
rärê	Hexagonsocketscrew	3rãræ rèrâ	rè	
rärë	Hexagonsocketscrew	3rãrè rãrårç	rä	
rårâ	Hexagonsocketscrew	3rãrä rãrärâ	rä	
rårã	Hexagonsocketscrew	3rãrä rërâ	rä	
rårä	Largeflatheadtappingscrew	3ræ	rç	
rårå	Plasticexpansionpipe	rç 3 3	rç	
råræ	Locknut	3rê	rãrä	
rårç	Locknut	3rãræ	rè	
rårè	Locknut	3rãrè	rä	
råré	Locknut	3rãrä	ræ	
rårê	Flatpad	3rê	rærä	
rårë	Flatpad	3rãræ	rãrä	
rærâ	Flatpad	3rãrè	ræ	
rærã	Flatpad	3rãrä	rê	
rærä	Flatpad	3rê	rårâ	
rærå	Flatpad	3rãræ	rè	
ræræ	Flatpad	3rãrè	rä	
rærç	Flatpad	3rãrä	ræ	
rærè	Innerfoam	rãrärâ rãrärâ rãrêrâ g 3 3 h	rå	
ræré	Instructions(warrantycard)	. < 2 9 , *rã Series	rã	

Note:if there is any change to the new product,the standard configuration after the change shall prevail.

qì = GXXGTZ_ IGXJ

Xingtai HVLS-FD1 Aseries HVLS FAN

warranty card

Customer information	Companyname y address y Postal Code y contacts y contact information y
Agent and dealer information	Companyname y address y Postal Code y contacts y contact information y
Product information	Product model y Delivery time y Product identification code y
Fault information	g 3 G OKTZG T ZKO SGKT J U TKZThZy Maintainer y